TANNER® TANK

PARTS LIST FOR MODELS T-30A, T-40A, T-60

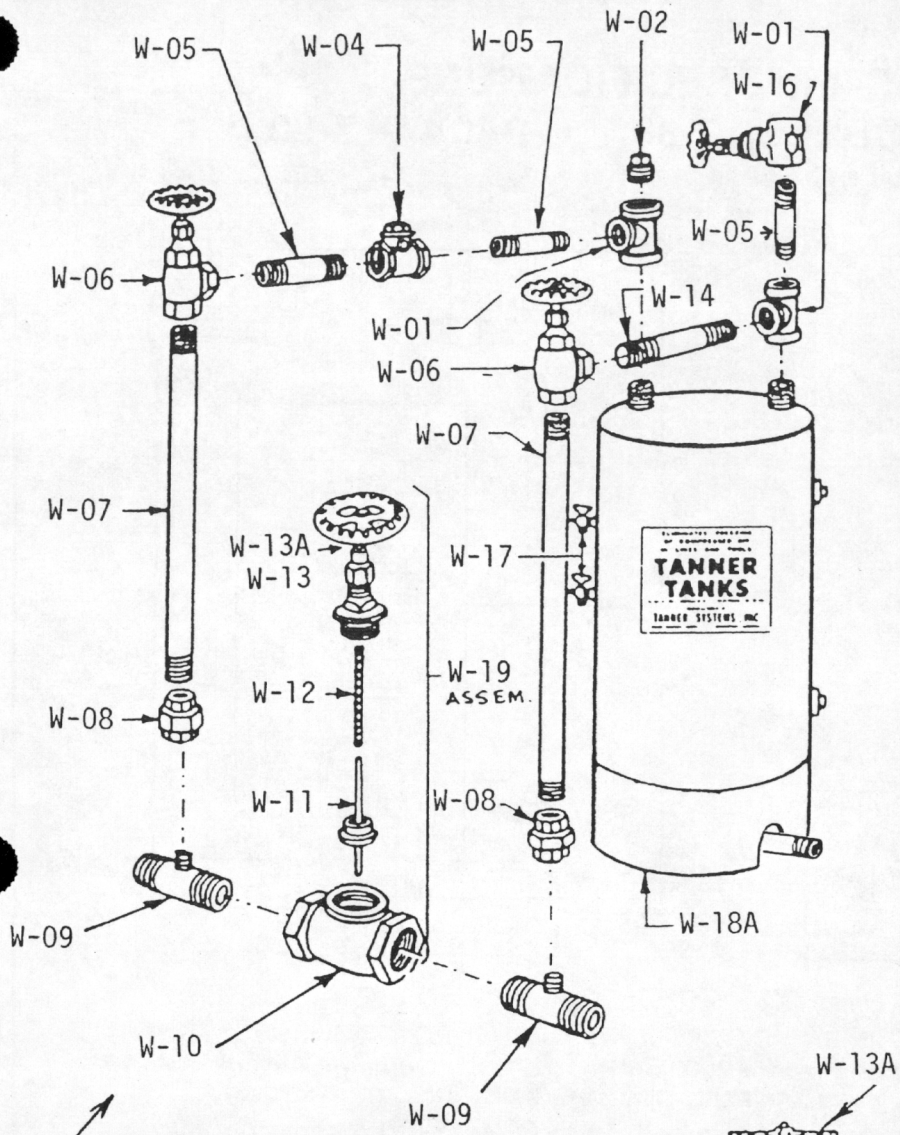

W-18	**Pressure Tank Complete**
	(Tank same for all models)
	Replacement Parts:
W-01	1" Tee ..... (2) ea.*
W-02	1" Plug .....
W-04	1" Swing Check Valve .....
W-05	1" X 2" Nipple ..... (3) ea.*
	(Same as part N03/W05)
W-06	1" Angle Valve ..... (2) ea.*
W-07	38" Nipple ..... (2) ea.*
W-08	1" Union .....(2) ea.*
W-14	1" X 6" Nipple .....
W-16	1" Gate Filling Valve .....
	(Same as part R65/N02/W16)
W-17	¼" Petcock .....(2) ea.*
W-18A	Pressure Tank only .....
W-19	**Control Valve Complete #**
	(Include W-09, 10, 11, 12, 13)
	Replacement Parts:
W-09	Nipple ..... (2) ea.*
W-10	Valve Body .....
W-10F	Valve Flange ..... .(2) ea.*
W-10G	Flange Gasket ..... (2) ea.*
W-10NB	Flange Nuts/Bolts .....(16) ea.*
	(Model T-40A, bolts 5/8" x 3")
	(Model T-60, bolts, ¾" x 3 ½")
W-11	Valve Seat Disc .....
W-12	Valve Spring .....
W-13	Valve Bonnet .....
W-13A	Bonnet Stem only .....

 # Must specify part number AND model number when ordering control valve or valve parts.

*** Denotes quantity required per unit.**

3" Configuration

4" and 6" Configuration

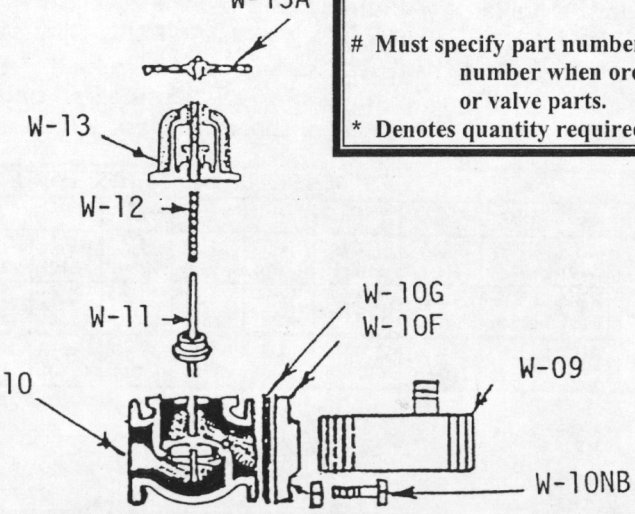

CAUTION

MAXIMUM WORKING PRESSURE: 200 p.s.i.
TEMP: 150° F.

Since 1928

TANNER SYSTEMS, INC.

P.O. Box 488
St. Joseph, MN 56374
Phone: 320-363-1800
800-461-6454
Fax: 320-363-1812
Website: www.tannersystems.com
EMAIL: info@tannersystems.com

Printed in U.S.A.
7/03

DIMENSIONS and SPECIFICATIONS
TANNER TANK MODELS: T-30A • T-40A • T-60

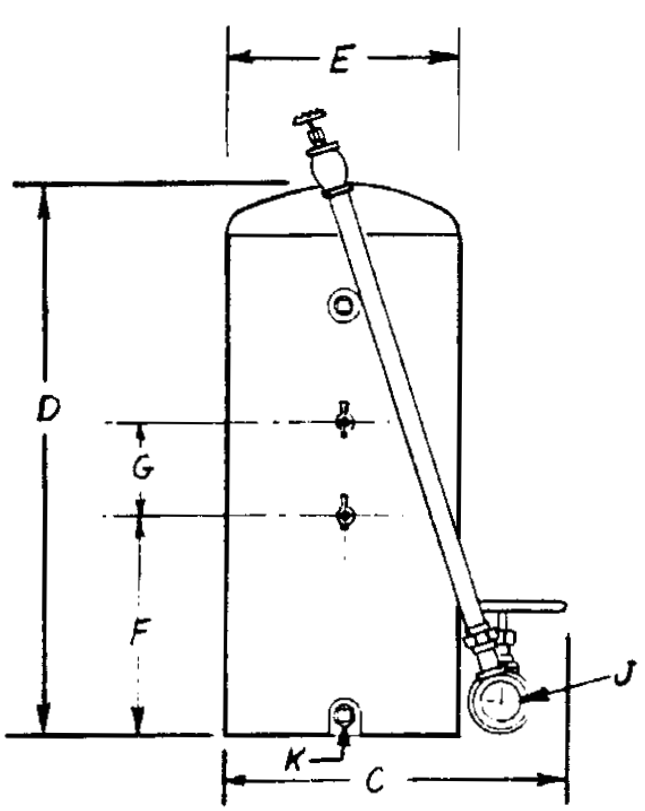

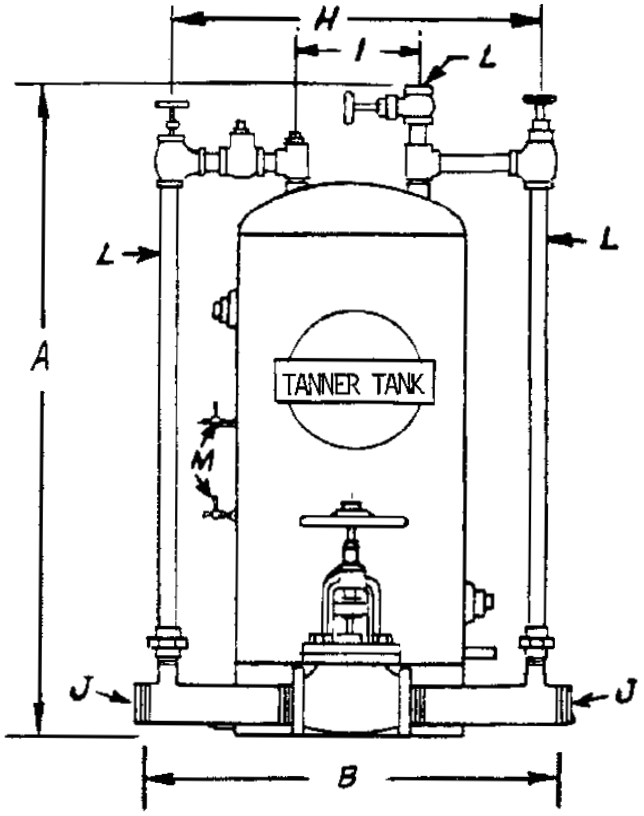

SPECIFICATIONS: All units designed for 200 PSI (14 kg. / cm²) working pressure.
Hydrostatic test 300 PSI (21 kg. / cm²).
All seams double-butt welded. All tanks are A.S.M.E. welded and inspected.
Inspection sheets for each unit available on request.

DIMENSIONS IN INCHES (MILLIMETERS)													
MODEL NO	A	B	C	D	E	F	G	H	I	J	K	L	M
T-30A	48 (1219)	28½ (698)	27 (686)	41 (1041)	16 (406)	13 (330)	12 (305)	24 (610)	8½ (216)	3 (76)	1 (25)	1 (25)	¼ (6.4)
T-40A	48 (1219)	30 (762)	29 (737)	41 (1041)	16 (406)	13 (330)	12 (305)	24 (610)	8½ (216)	4 (102)	1 (25)	1 (25)	¼ (6.4)
T-60	48 (1219)	30 (762)	40 (1016)	41 (1041)	16 (406)	13 (330)	12 (305)	24 (610)	8½ (216)	6 (152)	1 (25)	1 (25)	¼ (6.4)

DISCLAIMER:
There are no warranties including warrant of merchantibility for this product unless it is used exclusively in conjunction with TANNERGAS® and all instructions regarding installation and use have been followed.

INSTRUCTIONS FOR INSTALLING AND OPERATING A TANNER® TANK

INSTALLATION

---- Select a location on the main air line after the air has passed through the main receiver. Never install a Tanner® Tank between the compressor and the first receiver. *Do not locate near fire, intense lamps or other excessive heat.*

---- Cut out a section in the main air line long enough to receive the Control Valve, W-19.

---- Observe direction of the flow marked on the Control Valve and Tank reservoir.

OPERATION

**** Refer to page 2 of this Form for illustrations of installation examples ****

---- Refer to illustration below. **Use only Tannergas®** fluid in this unit. ***Do not smoke while filling.*** To fill the Tanner® Tank close both Angle Valves, W-06, then open the upper Petcock, W-17, on the side of the Tank reservoir. Bleed air slowly when opening Gate Filling Valve, W-16, and fill with Tannergas® through the W-16 until the Tannergas® drips out of Petcock. Tannergas® level should be maintained at all times between the two Petcocks.

---- The Control Valve, W-19, is a spring loaded globe valve and makes a Tanner® Tank adjustable to any and all weather conditions. When the Control Valve is in the full *open* position there is no air passing through the Tanner® Tank therefore the Tank is dormant in the line. When Tannergas® is required be sure there is a minimum amount of air being used then open both the Angle Valves, W-06, and slowly close the Control Valve, W-19, until a bubbling sound is noticed within the Tank. This can be detected by placing your ear to the Tank while the Control Valve is being closed. After the bubbling sound has been detected, close the Angle Valve, W-06, on the ***in*** side of the system until bubbling ceases; then open this same Angle Valve on ***in*** side just enough to detect a gentle bubbling sound. This is done to prevent too much air from being circulated through the Tank.

---- The Petcocks, W-17, are placed on the Tank reservoir to indicate high and low levels at which Tannergas® should be maintained. The (2) two Angle Valves, W-06, are for the convenience of filling the Tank reservoir without interrupting the service of the line. The Swing Check Valve, W-04, on the ***in*** line is designed to prevent Tannergas® from backing up into the main line. The Control Valve, W-19, closes when line pressure is released at the receiver and the air in the line beyond the Tanner® Tank is allowed to pass back through the Control Valve to the receiver.

---- The Tanner® Tank is provided with a drain located at the bottom of the Tank reservoir to facilitate periodic draining of any contaminants which may collect in the bottom of the Tank.

---- When the Tanner® Tank is not required in the line, close both the Angle Valve, W-06, and open the Control Valve, W-19, to full ***open*** position.

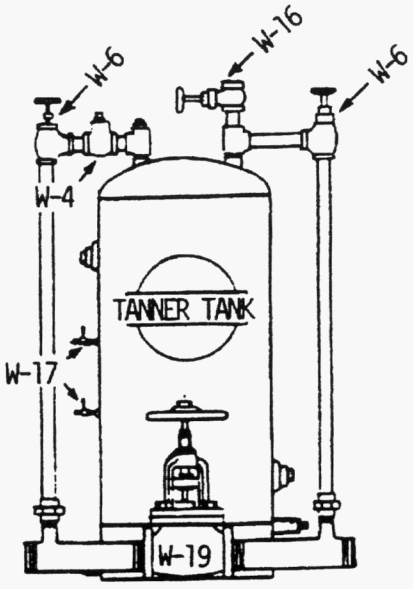

Model Number	Air line Size Inches (mm)	Overall Width Inches (mm)	Overall Height Inches (mm)	Overall Depth Inches (mm)	Shipping Weight lbs. (kg)	Reservoir Capacity Gal. (liter)	Initial Purchase of Tannergas Gal. (liter)
T-30A	2½-3 (64-76)	30 (762)	48 (1219)	24 (610)	223 (101)	15 (56.8)	54 (204.4)
T-40A	4 (102)	30 (762)	48 (1219)	26 (660)	330 (149)	15 (56.8)	54 (204.4)
T-60	6 (152)	30 (762)	48 (1219)	30 (762)	416 (188)	15 (56.8)	108 (408.8)

MAX WORKING PRESSURE; 200 p.s.i. (14 kg./cm²) **Higher pressure ratings available by special quotation.**

TANNER SYSTEMS, INC.
P.O. BOX 488
ST. JOSEPH, MN 56374
PHONE: 320-363-1800
TOLL FREE: 800-461-6454
FAX: 320-363-1812

WEBSITE: www.tannersystems.com
EMAIL: info@tannersystems.com

Optional Valve Placement For Tanner Tank Models, T-30A, T-40A, T-60

Fig.1.

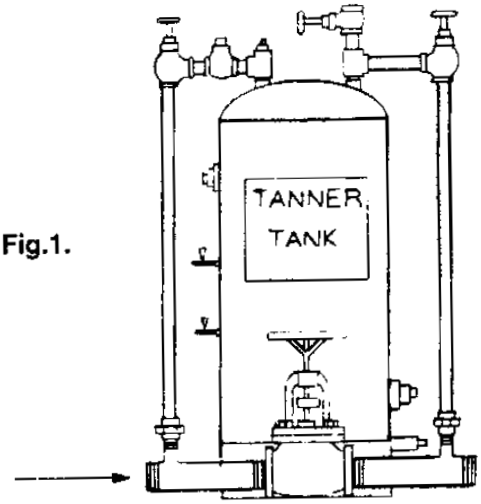

Standard positioning of valve from factory.

Fig.**2

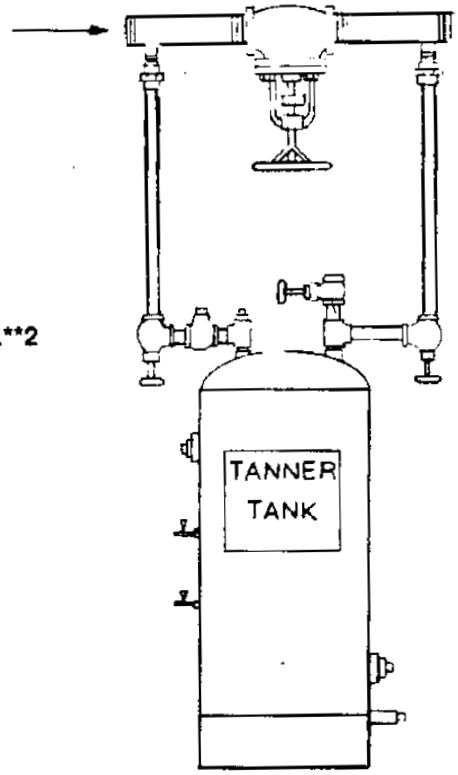

Fig.**3.

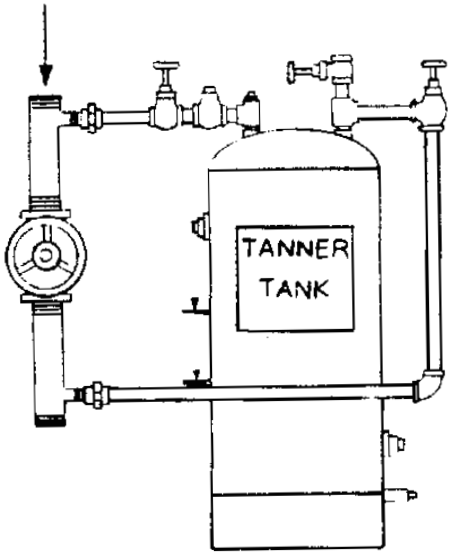

Fig.**4.

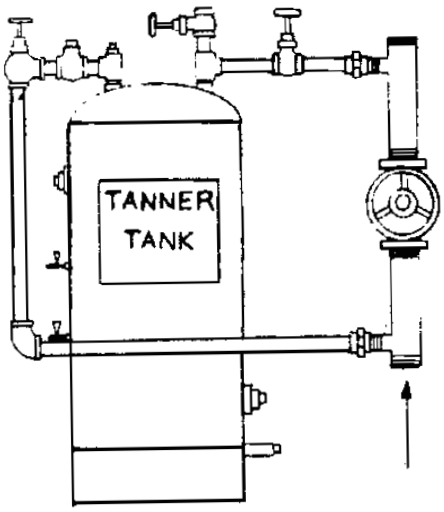

Includes regulating valve and all other necessary pipes and fittings as pictured in Figure 1.

Valve can be located in various positions to facilitate existing air system as illustrated in Figures 2, 3 and 4.

**When changing valve position, it may be necessary to use other than rigid pipe. Pipe must be capable of withstanding maximum working pressure of 200 p.s.i.